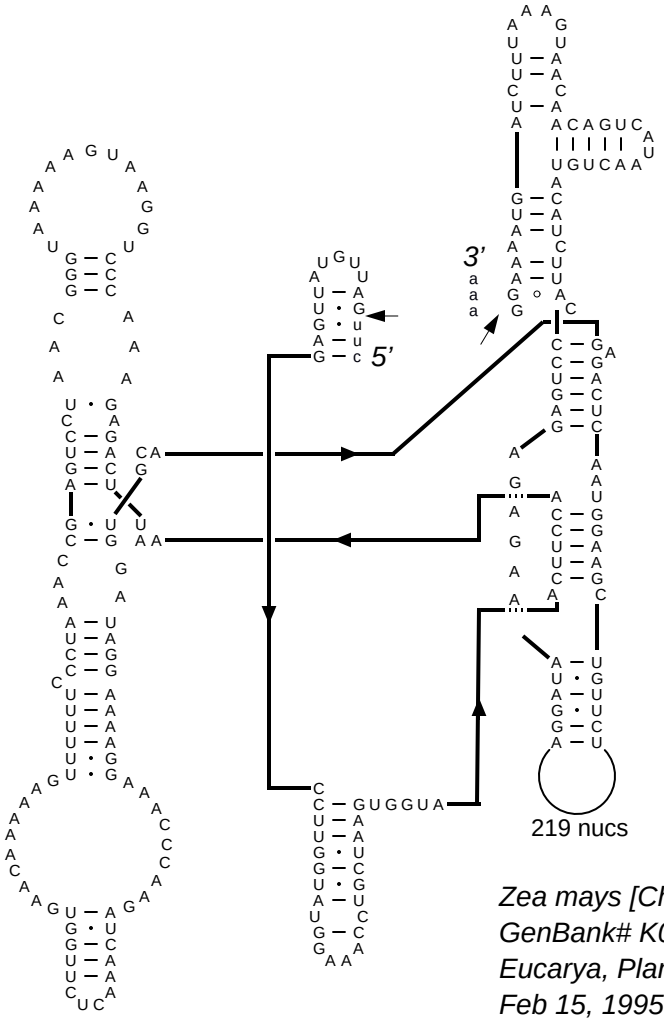

Zea mays [Chloroplast] tRNA leu
GenBank# K00635
Eucarya, Plantae, Angiospermophyta (IC3)
Feb 15, 1995